PENTAIR
WATER SOLUTIONS

HUB

Expand AiQ with the Hub

EXPAND AiQ WITH THE HUB

For applications requiring additional system capabilities, the optional AiQ Hub expands connectivity and control options. It provides additional features for creating coordinated, multi-tank systems and connects AiQ valves through wired or wireless communication.

With support for remote regeneration, system lockout, salinity sensors and additional relays, the Hub offers greater control and flexibility. It can also connect the system to a building management system using BACnet and Modbus protocols.

FEATURES AND BENEFITS

- **Wired and wireless connectivity**
  Seamless, scalable communication between AiQ valves
- **Hub pushes programming to other valves**
  Program once, deploy to all
- **BMS port for BACnet and Modbus protocol support**
  Full building management system (BMS) compatibility for enterprise integration
- **Remote regeneration capability, system lockout functionality, and additional relay ports enhance control, security, and connectivity**
  Provides greater convenience, prevents unauthorized changes, and enables seamless integration with external systems
- **Salinity sensor compatibility**
  Additional monitoring capabilities

AiQ VALVES & HUBS CONFIGURATIONS

STANDALONE VALVE
1 VALVE

The simplest setup: one valve, fully configured and controlled directly on the valve.

DIRECTLY WIRED VALVES
2 VALVES

Two valves wired connected to each other, like a twin/duplex system

WIRED VALVES TO HUB
1 TO 4 VALVES - I/O & ETHERNET

One HUB can be directly connected to a four-tank system via wired or wireless communication, providing full HUB functionality for up to four valves.

WIRELESS VALVES
2 TO 16 VALVES

Easily create larger and more complex systems by wirelessly connecting and coordinating up to 16 AiQ valves.

WIRELESS VALVES WITH HUB
1 TO 16 VALVES + HUB & ETHERNET

In larger installations, up to 16 AiQ valves can be connected wirelessly within a network, with the HUB enabling BMS communication for the entire system.

WIRELESS VALVES WITH MULTIPLE HUBS
1 TO 16 VALVES + HUB & ETHERNET

Additional hubs can be added to a wireless system to expand its Input/Output capacity for remote regeneration control and monitoring of system operating status

HUB CONNECTION TERMINAL LAYOUT

The illustration below shows all connection terminals available on the Hub.

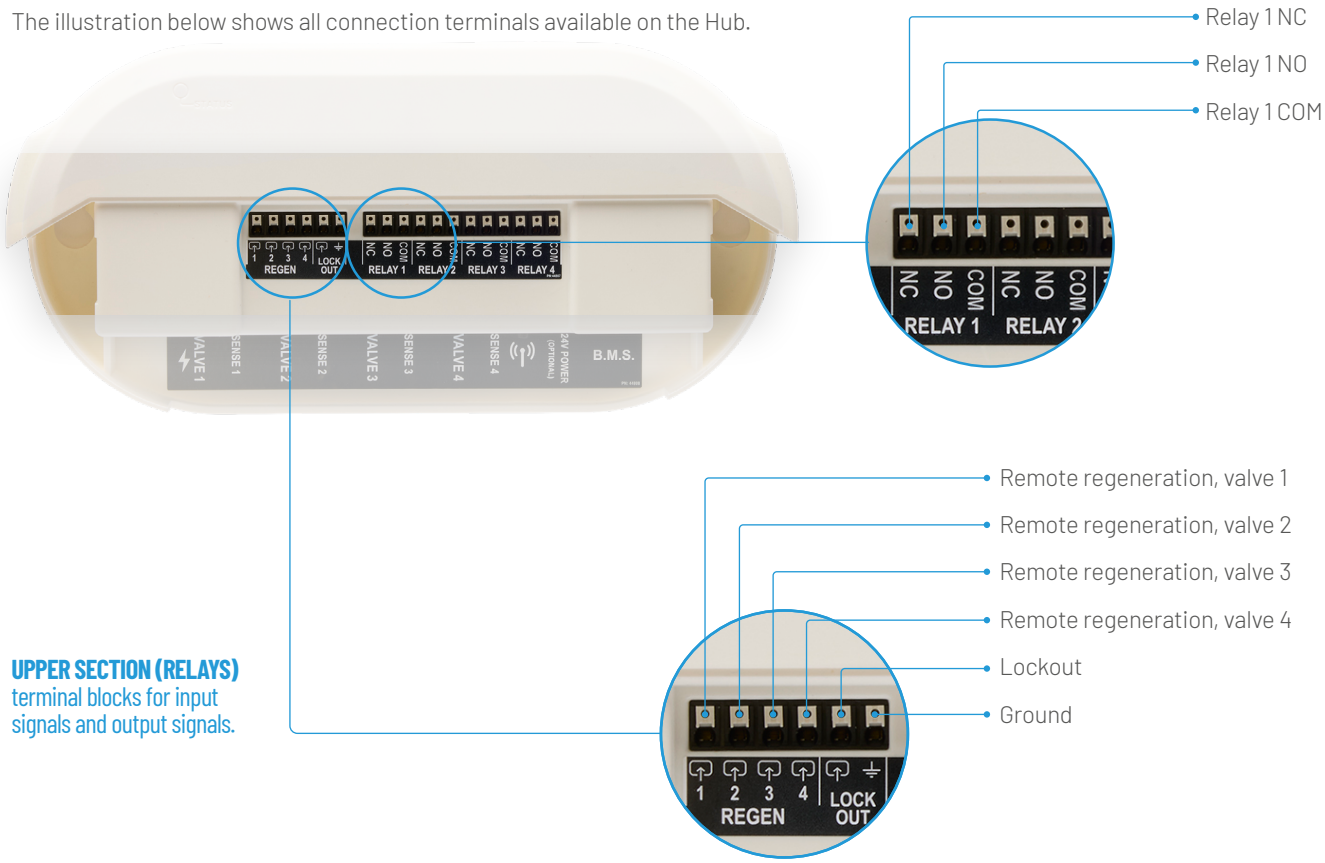

UPPER SECTION (RELAYS)
terminal blocks for input signals and output signals.

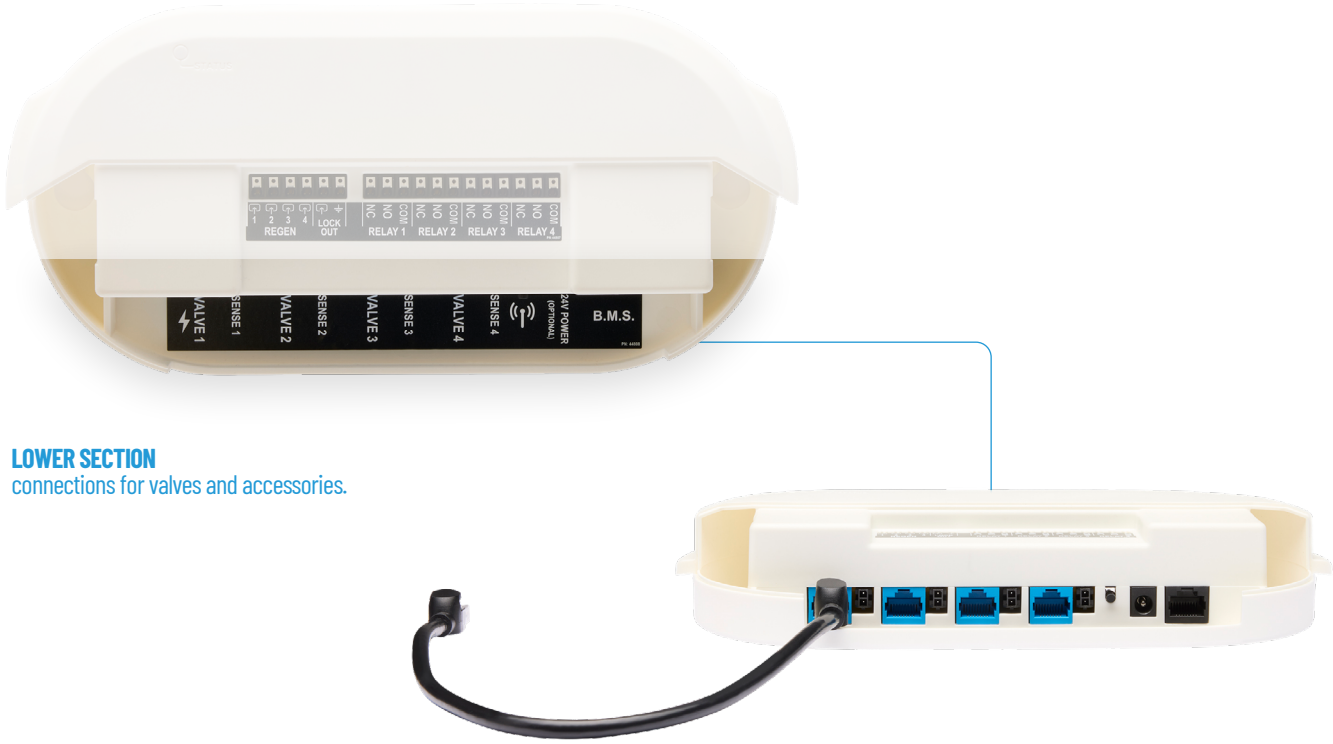

LOWER SECTION
connections for valves and accessories.

WIRING DIAGRAM

The following wiring diagrams illustrate the connections for valves and input/output signals:

- Remote start for each single valve
- General system Lock-out
- Relays applicable current 2A NC/NO

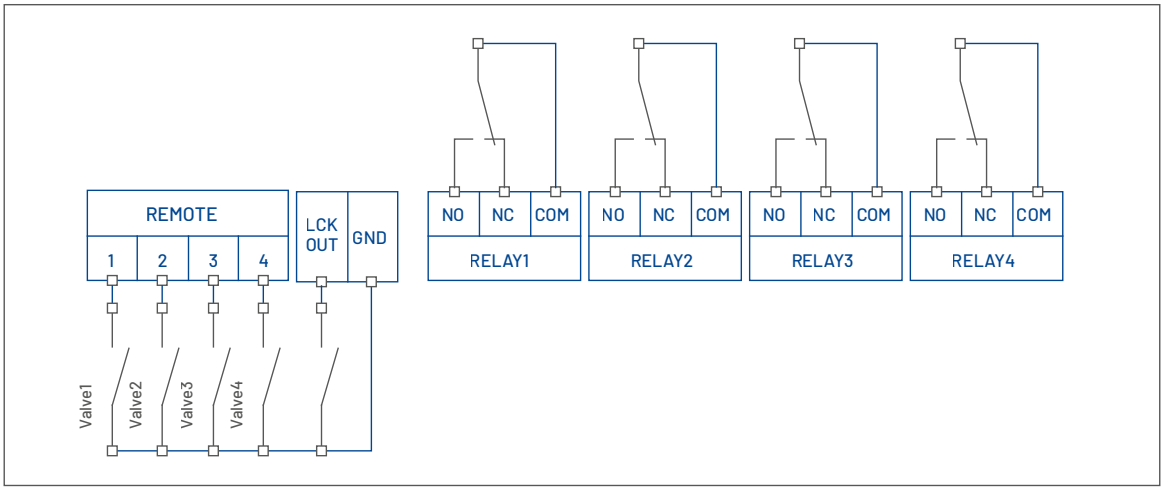

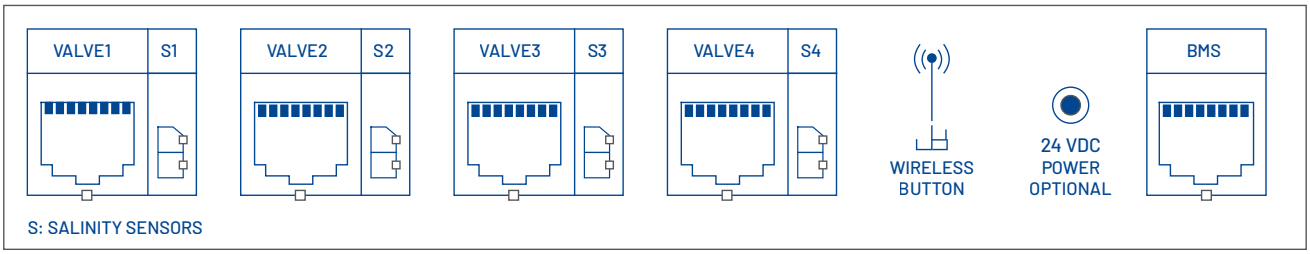

All indicated Pentair trademarks and logos are property of Pentair. Third party registered and unregistered trademarks and logos are the property of their respective owners.

© 2026 Pentair. All rights reserved.